# Paini Le Mans

Paini Le Mans shower mixer with thin flange

Finish: Chrome

90CR690O



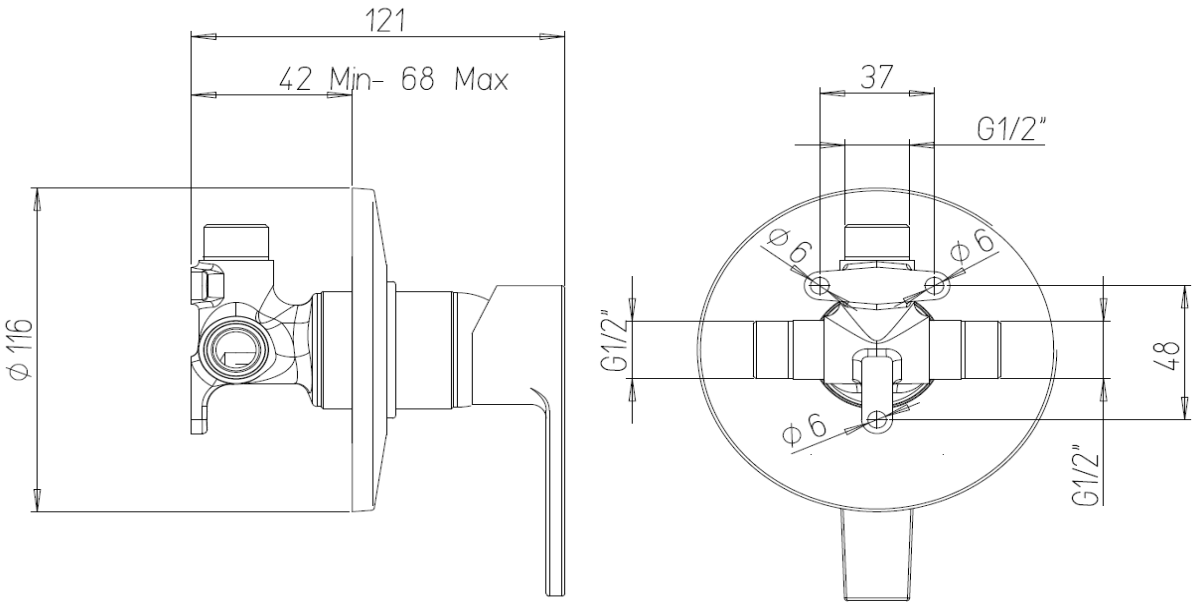


**Made in Italy in LFDR brass**

10 Year Warranty (2 Year Labour Warranty)

**For Mains Pressure only**

Max. Operating Pressure: 500Kpa.

Min. Operating Pressure: 150Kpa.

*Pipework must be flushed before installation*

*Please install as per manufacturers instructions in the box*

Due to our policy of continuous product development, the design and specification shown are subject to change without notice.

Please confirm all particulars with your sales consultant prior to purchase.