Paini Nove

Paini Nove wall mounted basin mixer, 126mm projection with thin flange

Finish: Chrome

09CR208OS



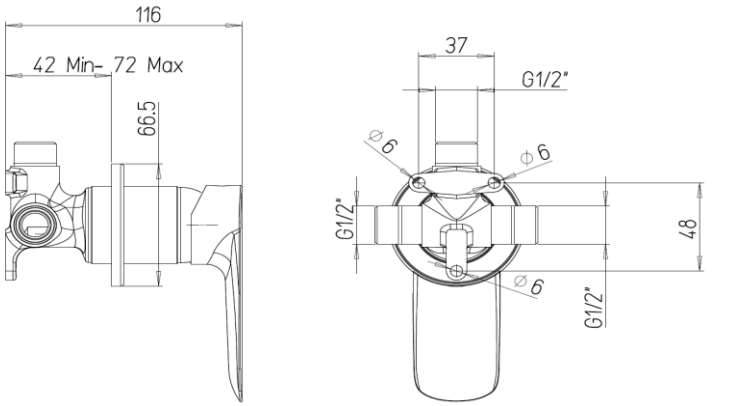

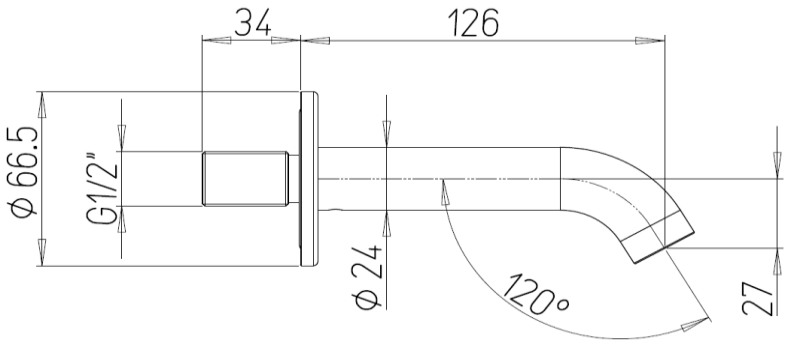

Made in Italy from LFDR brass

10 Year Warranty (2 Year Labour Warranty)

Water Efficiency: 5 Star

Water Consumption: 5.5L/min

For Mains Pressure only

Max. Operating Pressure: 500Kpa.

Min. Operating Pressure: 150Kpa.

Pipework must be flushed before installation

Please install as per manufacturers instructions in the box

Available finishes:

CR - Chrome

CQ - Brushed Nickel



Due to our policy of continuous product development, the design and specification shown are subject to change without notice.

Please confirm all particulars with your sales consultant prior to purchase.