Paini Dax R

Paini Dax R wall mounted basin mixer with individual back plate

Finish: Chrome

84CR208RQ

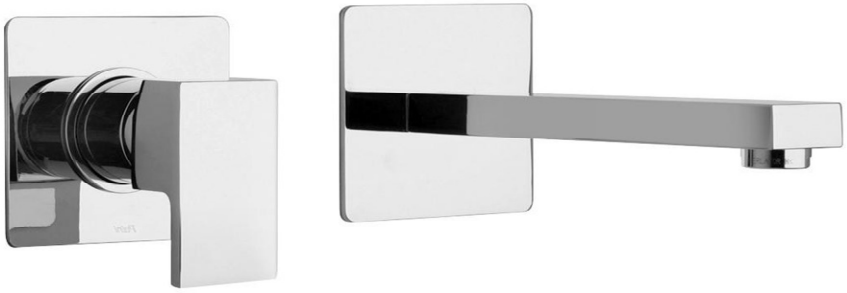

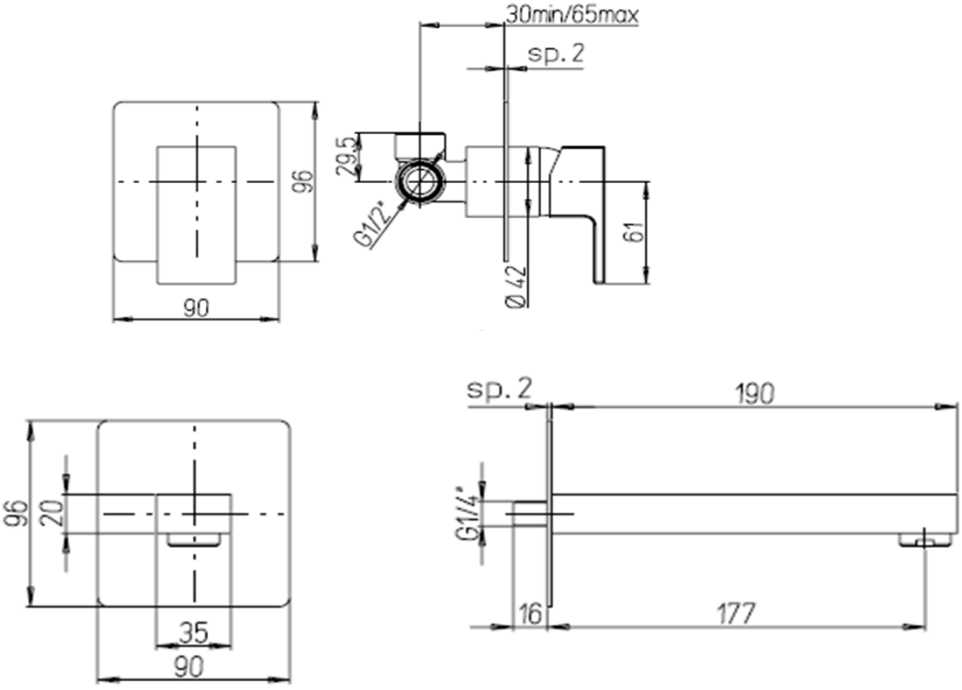

Made in Italy

5 Year Warranty (2 Year for Black)

WELS Rating: 4 Star - 7.5 Litres/Min

For Equal Pressure only

Max. Operating Pressure: 500Kpa.

Min. Operating Pressure: 50Kpa.

Pipework must be flushed before installation

Please install as per manufacturers instructions in the box

Available finishes:

BL - Black / Chrome

CQ - Brushed Nickel

Due to our policy of continuous product development, the design and specification shown are subject to change without notice.

Please confirm all particulars with your sales consultant prior to purchase.